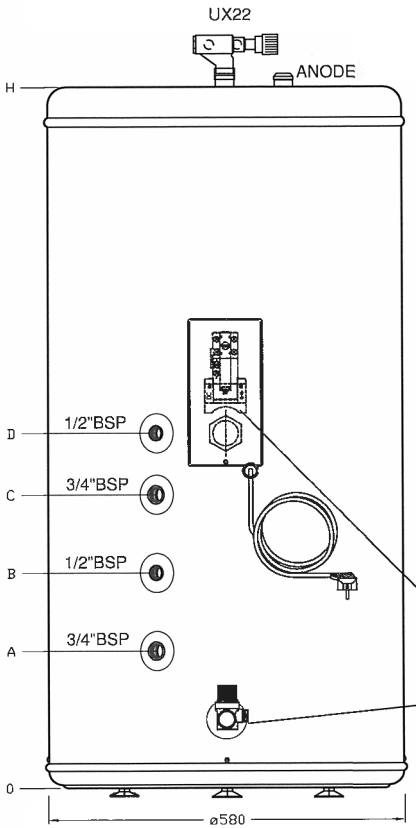

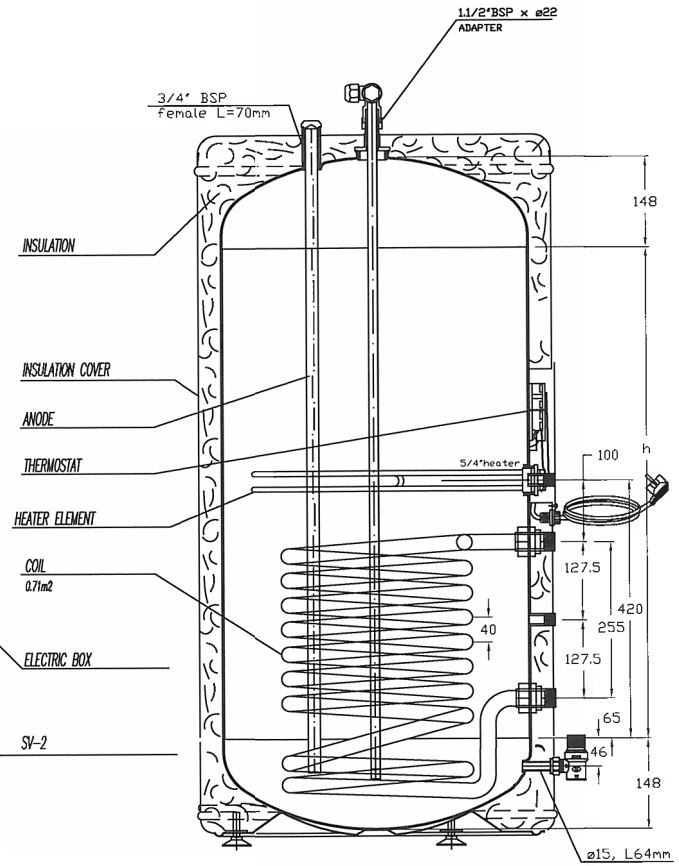

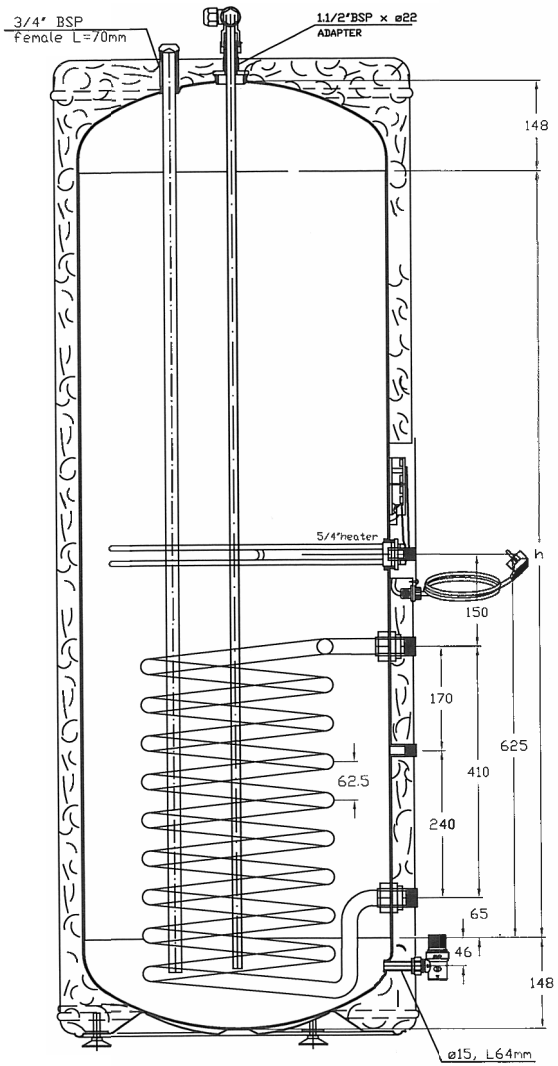

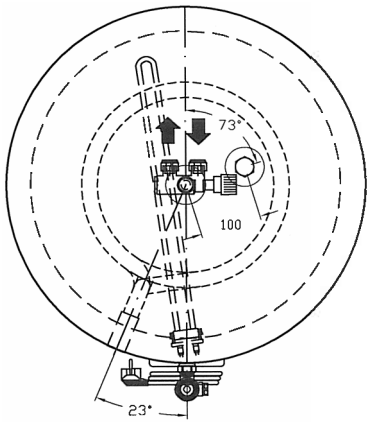

Volume	200	300
A	223mm	223mm
B	350mm	463mm
C	478mm	633mm
D	578mm	783mm
H	1150mm	1600mm
h	800mm	1250mm

Rev.	Date	Sign.	Godkj.	Kontr.
07	9/12-10	EJ		
06	13/8-10	EJ		
05	7/12-09	EJ		
04		PG		
03	17/6-09	EJ		
02	24/2-09	EJ		
01				

Tittel: RTV E 200-300
EKSPORT STD./NORGE

Tegningstype: Sammenstilling

Målestokk: 1:6
Tegn.: 19/2-09 EJ
Kontr.:
Godkj.:
Format: A3
Projeksjon

THIS DRAWING IS COPYRIGHT AND SHALL NOT BE REPRODUCED OR DISCLOSED TO A THIRD PARTY WITHOUT EXPRESS PERMISSION BY OSO HOTWATER A.S NORWAY ©

Tegn.nr.: 16-0509
Rev.: 07

A/S OSO, N-3300 Hokksund Tlf: 32 25 00 00 Fax: 32 25 00 90

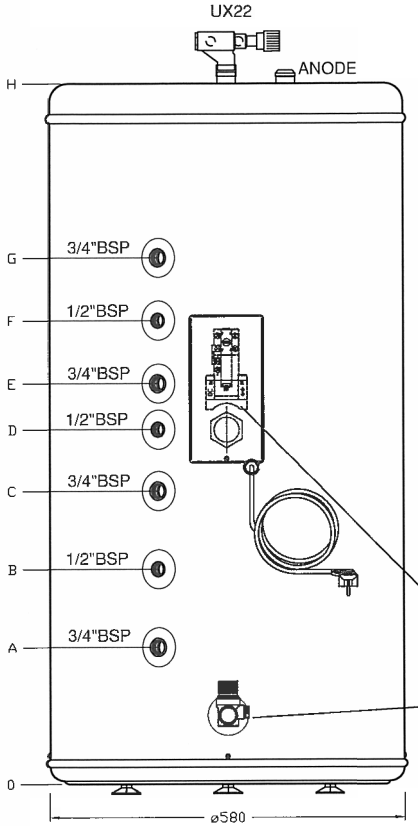

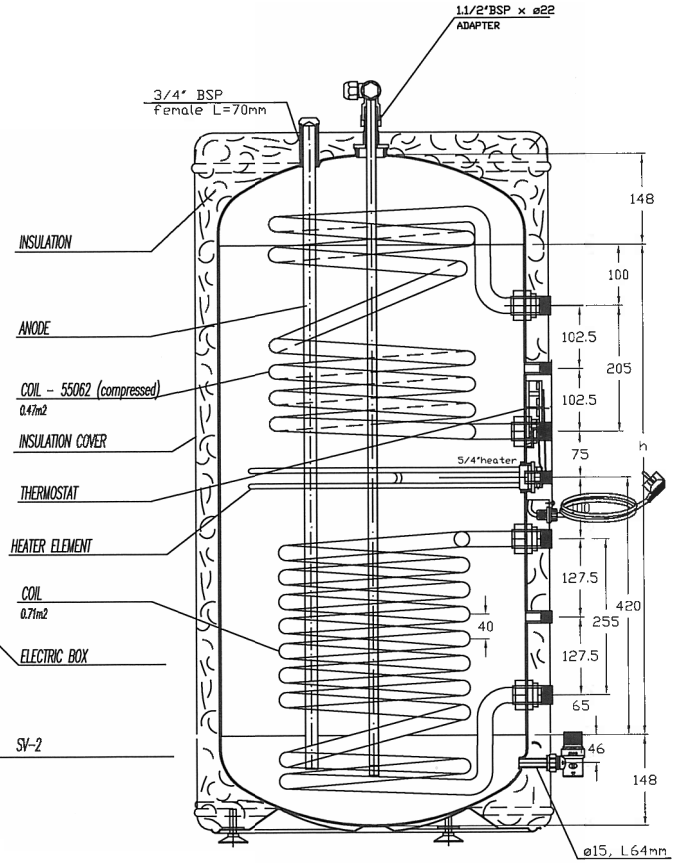

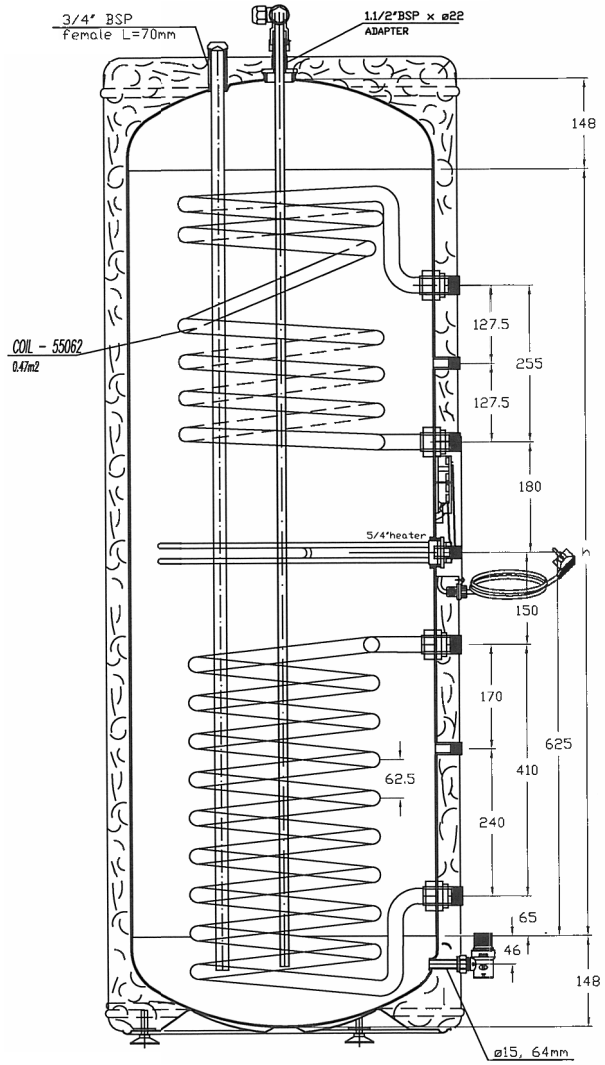

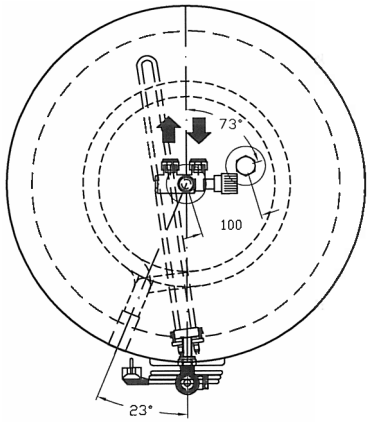

Volume	200	300
A	223mm	223mm
B	350mm	463mm
C	478mm	633mm
D	578mm	783mm
E	653mm	963mm
F	755mm	1090mm
G	858mm	1218mm
H	1150mm	1600mm
h	800mm	1250mm

Rev	Date	Sign	Konstr.	Godkj.
08	9/12-10	EJ		
05	15/5-10	EJ		
04	2/12-08	EJ		
03	1/7-08	EJ		
02	24/3-08	EJ		
01				

Tittel: **RTV VE 200-300**
EKSPORT STD./NORGE

Tegningstype: Sammenstilling

THIS DRAWING IS COPYRIGHT AND SHALL NOT BE REPRODUCED OR DISCLOSED TO A THIRD PARTY WITHOUT EXPRESS PERMISSION BY OSO HOTWATER AS NORWAY ©

Målestokk: 1:6
Format: A3
Tegn.: 19/2-09 EJ
Kontr:
Godkj.:
Projeksjon
Tegn.nr.: 16-0508
Rev.: 06

A/S OSO, N-3300 Hokksund Tlf: 32 25 00 00 Fax: 32 25 00 90